Scale-Aware and Adaptive Filtering Mamba for Cardiac Image Segmentation

Anonymous ICME submission

***Abstract*—Cardiac image segmentation is a critical prerequisite for the detection and intervention of cardiovascular diseases. Scale variation and boundary displacement are two key challenges that affect segmentation precision. Inspired by Mamba, a state space model, for perceiving both global and local context, we propose a novel Mamba-based cardiac image segmentation model called SAF-Mamba, with scale-aware and adaptive filtering to address these two challenges. Specifically, SAF-Mamba employs the multi-scale VSS (MSVSS) block to capture scale-dependent variations inherent in cardiac images, with the multi-scale depth-wise convolutions and the VSS block offering complementary perspectives for comprehensive pattern recognition. Additionally, adaptive filter blocks (AFBs) are integrated to preserve intricate details, with the filters in these blocks produced by the adaptive filter generator (AF Generator) to dynamically modulate frequency components to enhance boundary sharpness. Extensive experiments demonstrate that our SAF-Mamba achieves state-of-the-art (SOTA) performance on two public cardiac datasets: ACDC and M&Ms.**

***Index Terms*—Cardiac segmentation, Mamba, state space model, frequency domain analysis**

I. Introduction

Cardiovascular diseases (CVDs) are the leading cause of death globally, according to World Health Organization. Cardiac image segmentation is widely used for computer-aided diagnosis, surgical planning and subsequent treatment of CVDs. Automatic segmentation of the cardiac anatomical structures is particularly important, as manual segmentation is time-consuming, labor-intensive, and largely depends on the clinician's subjective judgment.

Over the years, deep learning has emerged as the leading method in medical image segmentation. U-Net [1] and its variants such as Attention UNet [2], and UNet++ [3] have been widely adopted due to their encoder-decoder architecture with skip connections. However, the limited receptive field of stacked convolutions in U-Net family hinders their effectiveness in cardiac image segmentation, as accurate boundary detection and anatomical structure differentiation require not only local perception but also the comprehensive global context understanding. To compensate for this shortcoming, self-attention mechanisms [4] , which excel at capturing remote dependencies, have been incorporated into many methods. Swin-Unet [5] introduces a window self-attention mechanism to replace traditional encoder blocks, exploring the potential of ViTs [6] in medical image segmentation. However, Transformer-based methods are less efficient when applied to high-resolution cardiac images due to their quadratic computational complexity with respect to sequence length.

Recently, Mamba [7], which originates from state space models (SSMs) [8] has emerged as a highly promising backbone, due to its ability to effectively combine the best of both worlds: long-range sequence relationship modeling and linear computational complexity. Several latest studies have preliminarily explored the effectiveness of Mamba in the vision domain. Specifically, VMamba [9] designs the Visual State Space (VSS) block to address the direction-sensitive problem arising from the inherent difference between 1D sequences and 2D images. U-Mamba [10] is specifically optimized for medical imaging, though enhancing long-range dependency modeling. However, these methods do not focus on the specific challenges that impact cardiac image segmentation, particularly the low sensitivity to substructures of varying sizes and inaccurate delineation of boundaries in cardiac images.

To address the aforementioned issues, we propose a scale-aware and adaptive filtering network, called SAF-Mamba, based on the encoder-decoder architecture. To effectively perceive scale variations, we design the multi-scale VSS (MSVSS) block, which consists of parallel multi-scale depth-wise convolutions and shared VSS blocks in two branches. To mitigate the loss of fine-grained features in the encoder, we propose the adaptive filter block (AFB) within skip connections, where different frequency components of features from multiple stages are enhanced. Considering the variation in feature maps extracted at each encoder stage, our filters are designed to dynamically transform into different types based on the features, following the data-dependent concept. In summary, the main contributions of our work are as follows:

- We present a novel scale-aware and adaptive filtering Mamba-based network (SAF-Mamba) for cardiac image segmentation. It is equipped with multi-scale VSS (MSVSS) blocks that efficiently model global context while learning to attend to scale variations.
- The adaptive filter block(AFB), a dynamic filtering skip connection strategy, is introduced to preserve high-frequency edge features from shallower encoders and low-frequency semantic features from deeper ones.
- Qualitative and quantitative results demonstrate that SAF-Mamba improves sensitivity to scale variations and adaptability to boundary delineation across two challenging cardiac image datasets.

II. Related Work

A. State Space Models

Recently, State Space Models have become a trending topic due to its ability to model long-range dependencies

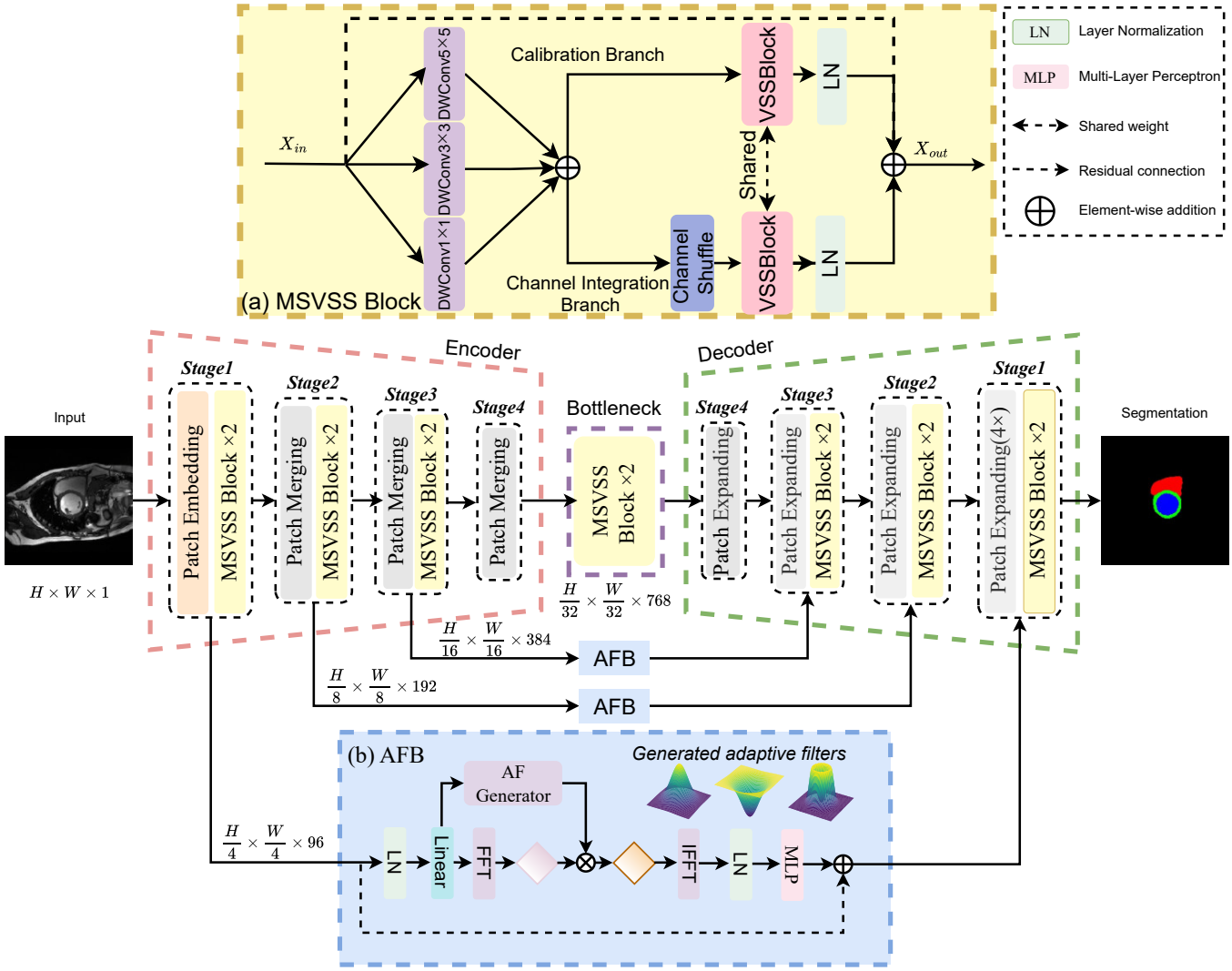

Fig. 1: Overview of the proposed SAF-Mamba: It consists of a symmetric four-stage encoder-decoder structure with a bottleneck. (a) An illustration of the multi-scale VSS (MSVSS) Block, which is the primary module that composes eachstage of SAF-Mamba. (b) The illustration of the apative filter block (AFB).

while maintaining linear complexity with respect to the input sequence length. Mamba integrates a selection mechanism and hardware-aware optimization into standard SSMs, achieving a remarkable balance of performance and efficiency. Several studies have explored the effectiveness of Mamba in the field of computer vision. For instance, Vision Mamba [11] proposes a generic pure-SSM-based visual backbone network, which is the first method to apply Mamba to two-dimensional image data. In downstream vision tasks, such as medical image segmentation, Mamba also demonstrates significant potential. Mamba-UNet [12] presents a novel medical image segmentation architecture that combines the encoder-decoder structure of U-Net with the powerful global context modeling capability of Mamba, thereby improving segmentation performance through pure visual Mamba blocks. Inspired by Mamba-UNet, our MSVSS block enhances the VSS block by incorporating multi-scale depth-wise convolutions, allowing SAF-Mamba to better adapt to scale variations in cardiac anatomical structures.

B. Frequency Domain Learning

The Fourier Transform (FT) is a fundamental technique in frequency domain analysis and has been applied across various computer vision tasks in recent years. Early methods primarily focused on feature extraction in the frequency domain, using FT to convert between spatial and frequency domains. Due to the efficiency of the Fast Fourier Transform (FFT) algorithm, FT-based approaches have emerged as effective token mixers and efficient alternatives to the self-attention mechanism. For example, DFFormer [13] utilizes the dynamic weighted filters as the token mixer. Some studies have incorporated FT into medical image segmentation. EM-Net [14] applies learnable weight parameters to frequency features for efficient frequency domain learning. Additionally, more recent methods have extended FT's application by performing filtering operations in the frequency domain. FE-VAD [15] decouples the temporal information from the video stream into high- and

low-frequency components, which are subsequently enhanced through separate high and low frequency filters. Our AFB is closely related to frequency filtering methods. Unlike previous approaches that specify a fixed filter type, our filters in AFB can dynamically transform into high-pass, low-pass or band-pass based on the input features, those to be filtered. This flexibility allows the preservation of high-frequency boundary detail while maintaining low-frequency semantic features.

III. Method

A. Overview Architecture

As shown in Fig. 1, our proposed SAF-Mamba is based on the U-shaped hierarchical structure with skip connections. The encoder consists of four stages, starting with patch embedding, which divides the input image $I \in \mathbb{R}^{H\times W\times 1}$ into non-overlapping patches with the number $\frac{H}{4} \times \frac{W}{4}$ and performs linear embedding to project patches to an specified dimension of 96, similar to the approach used in [6] and [9]. These patch tokens are then processed through multiple MSVSS blocks for feature extraction, followed by patch merging layers that halve the spatial dimensions while doubling the channel depth, creating hierarchical representations. In the four decoding stages, we upscale the feature maps from the previous stage by patch expanding and concatenate them with the outputs from the corresponding AFBs applied during the first three encoder stages. Finally, patch expanding performs a 4x upsampling to produce a segmentation mask matching the input size. Next, we will elaborate on the design of each key component.

B. Multi-Scale VSS Block

A persistent challenge in cardiac image segmentation is the model's ability to adapt to features across scale variations. Inspired by the observation that varying kernel sizes in convolutions can yield diverse receptive fields [16], which enables effective local feature perception, we propose MSVSS blocks. These blocks leverage the global modeling capabilities of VSS [9] while enhancing the perception of scale variations through multi-scale depth-wise convolutions, ensuring comprehensive pattern recognition in cardiac images. The MSVSS block consists of parallel multi-scale depth-wise convolutions, a channel integration branch, and a calibration branch. Specifically, the parallel depth-wise convolutions [17] with different kernel sizes are employed to extract multi-scale feature representations. Since depth-wise convolutions ignore the inter-channel relationships, we introduce the channel integration branch, which employs channel shuffle [18] to capture and integrate inter-channel dependencies. Meanwhile, the calibration branch is designed to refine overlooked features in the channel integration branch. To achieve both global understanding and local scale perception, these two branches multiplex the same VSS block, built upon feature maps with scale awareness, thereby enabling comprehensive visual understanding while reducing computation complexity. As illustrated in Fig. 1(a), the multi-scale features are derived from the input feature map $\mathbf{X}_{in} \in \mathbb{R}^{H\times W\times C}$ using the following equation:

$$\mathbf{Y} = \sum_{ks\in \mathrm{KS}} \mathrm{DWConv}_{ks}(\mathbf{X}_{in}) + \mathbf{X}_{in} \tag{1}$$

where $\mathrm{DWConv}_{ks}(\cdot)$ denotes a depth-wise convolution with a kernel size of ks. KS denotes the set of convolution kernel sizes, given by $\{1\times 1, 3\times 3, 5\times 5\}$.

The VSS block used in our two branches is an visual extension of the Mamba block, which originates from State Space Models (SSMs). Classical SSMs represent continuous systems, which are fundamental for translating one-dimensional inputs into outputs through latent states, utilizing a framework of linear ordinary differential equations. For a system with input $x(t)$, the output $y(t)$ can be obtained though a latent space representation $h(t)$ as described in (2) :

$$\begin{aligned} h'(t) &= \mathbf{A}h(t) + \mathbf{B}x(t) \\ y(t) &= \mathbf{C}h(t) + \mathbf{D}x(t) \end{aligned} \tag{2}$$

where $\mathbf{A}$, $\mathbf{B}$, $\mathbf{C}$, and $\mathbf{D}$ are learnable parameters. To integrate SSMs into deep learning models, discretization is required. By introducing a timescale parameter $\Delta \in \mathbb{R}$ and employing the zero-order hold (ZOH) method, the continuous system is transformed into a discrete one. Selective State Space Models (S6) [7], introduced by Mamba, further enhance the adaptability of SSMs by making the parameters $\mathbf{B}$, $\mathbf{C}$, and Δ input-dependent. This modification improves the model's performance by allowing it to dynamically adjust to varying input conditions.

The multi-scale features are then fed into the channel integration and calibration branch to capture inter-channel dependencies and refine the extracted features, as described in the following equations:

$$\begin{aligned} \mathbf{Y}_1 &= \mathrm{VSS}_{\text{shared}}(\text{Channel Shuffle}(\mathbf{Y})) \\ \mathbf{Y}_2 &= \mathrm{VSS}_{\text{shared}}(\mathbf{Y}) \end{aligned} \tag{3}$$

Finally, the output $\mathbf{X}_{out} \in \mathbb{R}^{H\times W\times C}$ can be obtained through the sum of $\mathbf{Y}_1$, $\mathbf{Y}_2$ and residual connection from $\mathbf{X}_{in}$.

C. Adaptive Filter Block

Another issue that impacts cardiac image segmentation is that the successive downsampling operations in hierarchical encoder may cause the loss of important spatial features (e.g., edges, shapes) captured in the shallow stages and semantic features captured in the deeper stages. Recent studies [15] indicate that high-frequency features are sensitive to capturing finer details, whereas low-frequency features correspond better to high-level semantics. On the basis of this, we propose the Adaptive Filtering Block (AFB), which applies adaptive filtering to the encoder features within the skip connections. As shown in Fig. 1(b), the spatial representation $\mathbf{X}_i \in \mathbb{R}^{H\times W\times C}$ is first processed through layer normalization (LN) and then projected into $\hat{\mathbf{X}}_i \in \mathbb{R}^{H\times W\times 2C}$ using a linear layer. This is followed by a transformation into the spectral space. As many previous studies demonstrated [13] [14], the 2D discrete

Fourier transform (DFT) is widely used to map a discrete finite signal into frequency components, which is defined as:

$$F(u,v) = \sum_{h=0}^{H-1} \sum_{w=0}^{W-1} f(h,w) \cdot e^{-j2\pi\left(\frac{hu}{H}+\frac{wv}{W}\right)} \tag{4}$$

where j is the imaginary unit, $f(h,w)$ represents the intensity value at position (h,w) of the image in spatial domain and $F(u,v)$ denotes the complex frequency values, with (u,v) representing the coordinates of a spectrum in frequency domain.

To efficiently compute 2D DFT, we employ the 2D fast Fourier transform (FFT) to convert the features into frequency domain. Subsequently, adaptive filters produced by the adaptive filter generator (AF Generator) are applied to selectively enhance relevant frequency components while suppressing noise information. After filtering, the inverse FFT (IFFT) is applied to reconstruct the refined features back into the physical space. The above process can be depicted as:

$$A(\hat{\mathbf{X}}_i) = \mathcal{F}^{-1}(\mathcal{F}(\hat{\mathbf{X}}_i) \odot \mathbf{F}_c) \tag{5}$$

where $\odot$ denotes the element-wise product, $\mathcal{F}(\cdot)$ represents the 2D FFT and $\mathcal{F}^{-1}(\cdot)$ is the 2D IFFT. $\mathbf{F}_c$, generated by AF Generator, modulates the feature's spectrum, enhancing high-frequency components while suppressing low-frequency ones (or vice versa), which depends on the characteristics of $\mathbf{F}_c$ learned from the input. Subsequently, a multi-layer perceptron (MLP) layer is used to model cross-channel dependencies and further refine the feature representation. Finally, the refined output feature $\mathbf{X}_i^{out} \in \mathbb{R}^{H\times W\times C}$ is obtained by fusing it with the residual input, enabling the recovery of spatial details and ensuring robust feature integration across scales.

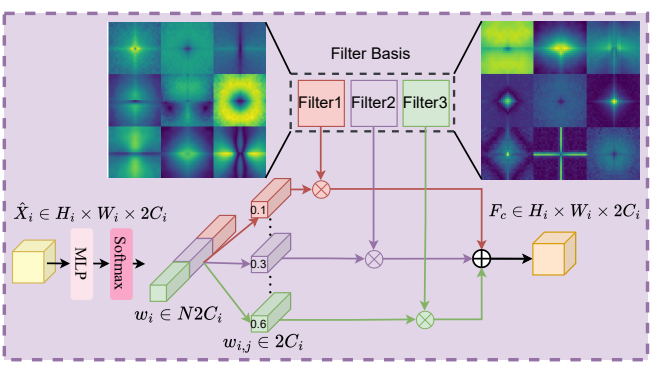

Fig. 2: An illustration of the Adaptive Filter Generator(AF Generator). Here, the different filter bases that SF-Mamam learns from two cardiac datasets are shown. The yellower color indicates the higher amplitude. High-pass, low-pass, and band-pass filters can be observed.

Adaptive Filter Generator: To obtain the adaptive filters, a MLP layer followed by softmax normalization is applied for each channel to generate weights, which are then used to linearly couple a filter basis defined as $\mathbb{M} = \{\mathcal{M}_1, \ldots, \mathcal{M}_i, \ldots, \mathcal{M}_N\}$, where each $\mathcal{M}_i \in \mathbb{C}^{H\times\lceil\frac{W}{2}\rceil}$ is a randomly initialized complex parameter. Since each channel in a spectrum represents responses to distinct spectral patterns, we apply channel-wise filtering in AFB, as shown in Fig. 2. The weights for generating a filter basis are computed as follows:

$$\mathbf{a} = \text{Softmax}\left(\text{MLP}\left(\frac{\sum_{h=1}^{\text{H}}\sum_{w=1}^{\text{W}} \mathbf{X}_{:,h,w}}{\text{HW}}\right)\right) \tag{6}$$

$$\mathbf{a} = (\alpha_1, \ldots, \alpha_{N2C})^\top \tag{7}$$

where $\mathbf{a} \in \mathbb{R}^{N2C}$ is a vector for weighting filter basis to generate adaptive filters. Finally, the adaptive filters $\mathbf{F}_c \in \mathbb{C}^{H\times\lceil\frac{W}{2}\rceil\times 2C}$ are computed by the following equation:

$$\mathbf{F}_c = \sum_{i=1}^{N} \left(\frac{e^{\alpha_{c,i}}}{\sum_{n=1}^{N} e^{\alpha_{c,n}}}\right) \mathcal{M}_i \tag{8}$$

where $\alpha_{c,i}$ represents the i-th component of the vector α within the context of the c-th group. The vector α is divided into N segments, each of length $2C$.

In our model, we set $N = 3$, which is the dimension of $\mathbb{M}$. A larger value would lead to excessive computational burden and redundancy between filters in the filter basis. On the other hand, setting N too small, such as $N = 1$, would cause the adaptive filters to degenerate into fixed and handcrafted ones.

IV. Experiments

A. Dataset

We evaluate the performance of SAF-Mamba on the two datasets: Automated Cardiac Diagnosis Challenge(ACDC) dataset [19] and Multi-Centre, Multi-Vendor and Multi-Disease Cardiac Image Segmentation Challenge (M&Ms) dataset [20].

ACDC dataset: This dataset consists of 200 annotated short-axis cardiac magnetic resonance (CMR) scans from 100 patients, with annotations for three cardiac structures: the right ventricle (RV), myocardium (MYO), and left ventricle (LV). The data is randomly split into 70 training cases (1930 axial slices), 10 validation cases, and 20 test cases.

M&Ms dataset: The M&Ms dataset comprises 375 patients, with a total of 7334 annotated slices obtained from four different magnetic resonance imaging vendors, including A) Siemens, B) Philips, C) GE, and D) Canon. Similar to the ACDC dataset, the RV, MYO and LV are annotated at both end-systole and end-diastole phases. The training set consists of 150 annotated CMR scans, with 75 scans each from vendors A and B, along with 25 unannotated scans from vendor C, which are not used for training. The test set includes 200 cases from all four vendors, with 50 scans from each.

B. Implementation Details and Evaluation Metrics

Implementation Details: We implement our network and conduct experiments using PyTorch 2.1.1 on a single NVIDIA RTX3090 GPU with 16GB of memory. Data preprocessing for the ACDC dataset follows the approach outlined in [12]. Similarly, the M&Ms dataset is preprocessed based on the method described in [21], where the in-plane spacing is resampled to $1.2 \times 1.2\ mm$, while the spacing along the z-axis remains unchanged. The input images of two datasets

TABLE I: Comparative experimental results of ACDC dataset. Avg represents the average segmentation accuracy of RV, LV, and MYO. The results with the highest ranking for each metric are highlighted in bold.

Methods	DSC(%)↑				HD95 (mm)↓
	RV	MYO	LV	Avg	
U-Net [1]	85.01	86.35	94.29	88.55	2.39
Swin-Unet [5]	85.62	84.49	94.03	88.05	2.08
TransUNet [22]	86.87	84.22	94.12	88.40	1.65
HiFormer [23]	90.51	89.27	95.68	91.82	1.12
TransCASCADE [24]	89.07	88.90	94.45	90.81	1.29
PVT-CASCADE [24]	90.15	**89.97**	95.05	91.72	1.16
Swin-UMamba [25]	85.12	83.73	93.81	87.55	2.47
UU-mamba [26]	90.23	89.43	95.60	91.75	1.20
Mamba-UNet [12]	90.25	88.39	94.27	90.97	1.81
SAF-Mamba(ours)	**90.87**	89.42	**96.34**	**92.21**	**1.05**

TABLE II: Comparative experimental results of M&Ms dataset. Avg represents the segmentation result across four different vendors: A, B, C, and D. The results with the highest ranking for each metric are highlighted in bold.

Methods	DSC(%)↑					HD95 (mm)↓
	A	B	C	D	Avg	
U-Net [1]	87.65	84.80	82.69	83.79	84.73	15.85
Swin-Unet [5]	86.27	84.52	83.11	84.95	84.71	13.66
TransUNet [22]	87.69	85.82	84.25	85.53	85.82	13.30
HiFormer [23]	87.90	83.94	83.25	83.86	84.74	12.78
TransCASCADE [24]	85.92	84.23	82.93	84.43	84.38	13.91
PVT-CASCADE [24]	88.71	87.12	85.36	87.81	87.25	12.60
Swin-UMamba [25]	87.88	86.15	83.67	85.28	85.75	13.29
UU-mamba [26]	88.15	86.90	85.22	86.79	86.77	13.09
Mamba-UNet [12]	88.32	86.48	83.11	86.98	86.22	14.05
SAF-Mamba(ours)	**89.16**	**88.79**	**86.83**	**88.92**	**88.43**	**12.14**

are resized to 224×224 and 256×256, respectively. We use the SGD optimizer with a learning rate of 0.01, momentum of 0.9 and weight decay of 1×10^{-4}. The default number of training iterations is 15,000 for the ACDC dataset and 10,000 for the M&Ms dataset, with a batch size of 16 for both. For all experiments, the loss function is a weighted sum of the cross-entropy (0.5) and DICE (0.5) loss.

Evaluation Metrics: Performance is evaluated on the Dice Similarity Coefficient (DSC) and 95% Hausdorff Distance (HD95) metrics for all experiments. The DSC denoted with an upward arrow (↑) indicates that higher values signify better performance. The HD95, marked with a downward arrow (↓), means smaller values indicate higher boundary accuracy.

C. Comparison Experiments

Comparison with State-of-the-arts: We compare the SAF-Mamba with nine state-of-the-art (SOTA) methods, including CNN-based , transformer-based, and Mamba-based methods.

The results of different methods on the ACDC dataset are shown in Table I. Our SAF-Mamba achieves the highest average DSC of 92.21%, surpassing the second-place model, Hiformer, by 0.39%. It outperforms other methods by a significant margin in RV segmentation, where the DSC reaches 90.87%. This demonstrates that our approach effectively captures the size variations in cardiac substructures. SAF-Mamba also excels in HD95 metrics, reporting a score of 1.05. This indicates that the AFBs in our method preserve critical detailed information in feature maps. However, as the myocardium has fewer annotations compared to the ventricles, our method did not achieve the best DSC for MYO segmentation, suggesting that it struggles to effectively handle the class imbalance.

The M&Ms dataset, which comes from multiple clinical centers and different scanner vendors, presents greater segmentation challenges due to the inhomogeneous imaging protocols used across these centers. As a result, the segmentation performance shown in Table II is lower compared to the ACDC dataset. However, our SAF-Mamba still outperforms the nine other methods in terms of both average DSC and HD95 metrics, with a DSC of 88.43% and a HD95 of 12.14, respectively. Notably, SAF-Mamba achieves the best performance across Vendors A, B, C, and D, demonstrating its ability to effectively address the challenge of variation across multiple centers and scanner vendors in the M&Ms dataset, highlighting the strong generalization capability of our model.

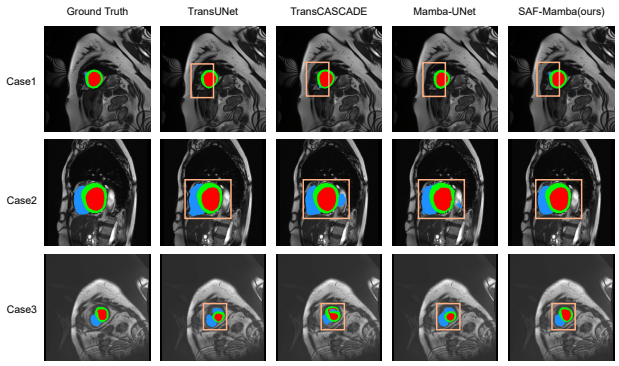

Fig. 3: The visualization of segmentation results from different methods on the ACDC dataset. Orange rectangles highlight the promotion of our segmentation results compared to others.

Visual Comparison: Fig. 3 provides a qualitative visualization of experimental results on the ACDC dataset. Case 1 demonstrates that our SAF-Mamba excels in capturing finer details, achieving a closer alignment with ground truth, while competing methods such as TransCASCADE struggle with under-segmentation of the RV particularly in areas with low contrast and irregular organ boundaries. Cases 2 and 3 reveal that competing methods fail to adapt effectively to size variations, resulting in either over- or under-segmentation. In contrast, SAF-Mamba demonstrates robustness in accurately segmenting cardiac structures, producing results that are both structurally consistent and closely aligned with ground truth.

TABLE III: The results of ablation studies conducted on ACDC dataset.

Methods	MSVSS	AFB	DSC(%)↑	HD95(mm)↓
SAF-Mamba(ours)	✗	✗	90.97	1.81
	✓	✗	91.25	1.47
	✗	✓	91.54	1.42
	✓	✓	92.21	1.05

D. Ablation Studies

To evaluate the effectiveness of different components of our model, we conduct a set of experiments on the ACDC dataset. When neither the MSVSS block nor AFB component is used, the model refers to Mamba-UNet. As shown in Table III, the incorporation of both MSVSS block and AFB improves performance, with AFB proving to be more effective. The full configuration of SAF-Mamba, which integrates both MSVSS blocks and AFBs, achieves the highest performance, with a DSC of 92.21% and an HD95 of 1.05 mm, demonstrating the effectiveness of these components.

V. Conclusion

In this paper, we propose a novel cardiac image segmentation approach, termed SAF-Mamba, which addresses two key challenges: scale variation and boundary displacement. Specifically, a dual-branch architecture with parallel depth-wise convolutions is designed to capture diverse scale information and provide comprehensive context understanding. Additionally, we introduce an effective adaptive filtering block to enhance frequency components in the Fourier domain. Experiments on two public datasets demonstrate that our approach paves the way for more efficient and accurate computer-aided diagnostic systems, particularly in the realm of cardiovascular disease detection and intervention.

References

[1] Olaf Ronneberger, Philipp Fischer, and Thomas Brox, "U-net: Convolutional networks for biomedical image segmentation," in *Medical image computing and computer-assisted intervention–MICCAI 2015: 18th international conference, Munich, Germany, October 5-9, 2015, proceedings, part III 18*. Springer, 2015, pp. 234–241.

[2] Ozan Oktay, "Attention u-net: Learning where to look for the pancreas," *arXiv preprint arXiv:1804.03999*, 2018.

[3] Zongwei Zhou, Md Mahfuzur Rahman Siddiquee, Nima Tajbakhsh, and Jianming Liang, "Unet++: Redesigning skip connections to exploit multiscale features in image segmentation," *IEEE Transactions on Medical Imaging*, vol. 39, no. 6, pp. 1856–1867, June 2020.

[4] A Vaswani, "Attention is all you need," *Advances in Neural Information Processing Systems*, 2017.

[5] Hu Cao, Yueyue Wang, Joy Chen, Dongsheng Jiang, Xiaopeng Zhang, Qi Tian, and Manning Wang, "Swin-unet: Unet-like pure transformer for medical image segmentation," in *European conference on computer vision*. Springer, 2022, pp. 205–218.

[6] Alexey Dosovitskiy, Lucas Beyer, Alexander Kolesnikov, Dirk Weissenborn, Xiaohua Zhai, Thomas Unterthiner, and et al., "An image is worth 16x16 words: Transformers for image recognition at scale," *arXiv preprint arXiv:2010.11929*, 2021.

[7] Albert Gu and Tri Dao, "Mamba: Linear-time sequence modeling with selective state spaces," *arXiv preprint arXiv:2312.00752*, 2023.

[8] Albert Gu, Karan Goel, and Christopher Ré, "Efficiently modeling long sequences with structured state spaces," *arXiv preprint arXiv:2111.00396*, 2022.

[9] Yue Liu, Yunjie Tian, Yuzhong Zhao, Hongtian Yu, Lingxi Xie, Yaowei Wang, and et al., "Vmamba: Visual state space model," *arXiv preprint arXiv:2401.10166*, 2024.

[10] Jun Ma, Feifei Li, and Bo Wang, "U-mamba: Enhancing long-range dependency for biomedical image segmentation," *arXiv preprint arXiv:2401.04722*, 2024.

[11] Lianghui Zhu, Bencheng Liao, Qian Zhang, Xinlong Wang, Wenyu Liu, and Xinggang Wang, "Vision mamba: Efficient visual representation learning with bidirectional state space model," *arXiv preprint arXiv:2401.09417*, 2024.

[12] Ziyang Wang, Jian-Qing Zheng, Yichi Zhang, Ge Cui, and Lei Li, "Mamba-unet: Unet-like pure visual mamba for medical image segmentation," *arXiv preprint arXiv:2402.05079*, 2024.

[13] Yuki Tatsunami and Masato Taki, "Fft-based dynamic token mixer for vision," in *Proceedings of the AAAI Conference on Artificial Intelligence*, 2024, vol. 38, pp. 15328–15336.

[14] Ao Chang, Jiajun Zeng, Ruobing Huang, and Dong Ni, "Em-net: Efficient channel and frequency learning with mamba for 3d medical image segmentation," in *International Conference on Medical Image Computing and Computer-Assisted Intervention*. Springer, 2024, pp. 266–275.

[15] Ruoyan Pi, Jinglin Xu, and Yuxin Peng, "Fe-vad: High-low frequency enhanced weakly supervised video anomaly detection," in *2024 IEEE International Conference on Multimedia and Expo (ICME)*, July 2024, pp. 1–6.

[16] Mingcan Ma, Changqun Xia, Chenxi Xie, Xiaowu Chen, and Jia Li, "Boosting broader receptive fields for salient object detection," *IEEE Transactions on Image Processing*, vol. 32, pp. 1026–1038, 2023.

[17] Md Mostafijur Rahman, Mustafa Munir, and Radu Marculescu, "Emcad: Efficient multi-scale convolutional attention decoding for medical image segmentation," in *Proceedings of the IEEE/CVF Conference on Computer Vision and Pattern Recognition*, 2024, pp. 11769–11779.

[18] Xiangyu Zhang, Xinyu Zhou, Mengxiao Lin, and Jian Sun, "Shufflenet: An extremely efficient convolutional neural network for mobile devices," in *Proceedings of the IEEE conference on computer vision and pattern recognition*, 2018, pp. 6848–6856.

[19] Olivier Bernard, Alain Lalande, Clement Zotti, Frederick Cervenansky, Xin Yang, Pheng-Ann Heng, and et al., "Deep learning techniques for automatic mri cardiac multi-structures segmentation and diagnosis: Is the problem solved?," *IEEE Transactions on Medical Imaging*, vol. 37, no. 11, pp. 2514–2525, Nov. 2018.

[20] Víctor M. Campello, Polyxeni Gkontra, Cristian Izquierdo, Carlos Martín-Isla, Alireza Sojoudi, Peter M. Full, and et al., "Multi-centre, multi-vendor and multi-disease cardiac segmentation: The m&ms challenge," *IEEE Transactions on Medical Imaging*, vol. 40, no. 12, pp. 3543–3554, Dec. 2021.

[21] Yunhe Gao, Mu Zhou, and Dimitris N Metaxas, "Utnet: a hybrid transformer architecture for medical image segmentation," in *Medical Image Computing and Computer Assisted Intervention–MICCAI 2021: 24th International Conference, Strasbourg, France, September 27–October 1, 2021, Proceedings, Part III 24*. Springer, 2021, pp. 61–71.

[22] Jieneng Chen, Yongyi Lu, Qihang Yu, Xiangde Luo, Ehsan Adeli, Yan Wang, and et al., "Transunet: Transformers make strong encoders for medical image segmentation," *arXiv preprint arXiv:2102.04306*, 2021.

[23] Moein Heidari, Amirhossein Kazerouni, Milad Soltany, Reza Azad, Ehsan Khodapanah Aghdam, Julien Cohen-Adad, and Dorit Merhof, "Hiformer: Hierarchical multi-scale representations using transformers for medical image segmentation," in *Proceedings of the IEEE/CVF winter conference on applications of computer vision*, 2023, pp. 6202–6212.

[24] Md Mostafijur Rahman and Radu Marculescu, "Medical image segmentation via cascaded attention decoding," in *2023 IEEE/CVF Winter Conference on Applications of Computer Vision (WACV)*, Waikoloa, HI, USA, Jan. 2023, pp. 6211–6220, IEEE.

[25] Jiarun Liu, Hao Yang, Hong-Yu Zhou, Yan Xi, Lequan Yu, Cheng Li, , and et al., "Swin-umamba: Mamba-based unet with imagenet-based pretraining," in *International Conference on Medical Image Computing and Computer-Assisted Intervention*. Springer, 2024, pp. 615–625.

[26] Ting Yu Tsai, Li Lin, Shu Hu, Ming-Ching Chang, Hongtu Zhu, and Xin Wang, "Uu-mamba: Uncertainty-aware u-mamba for cardiac image segmentation," *arXiv preprint arXiv:2405.17496*, 2024.